KCST27.8/738016

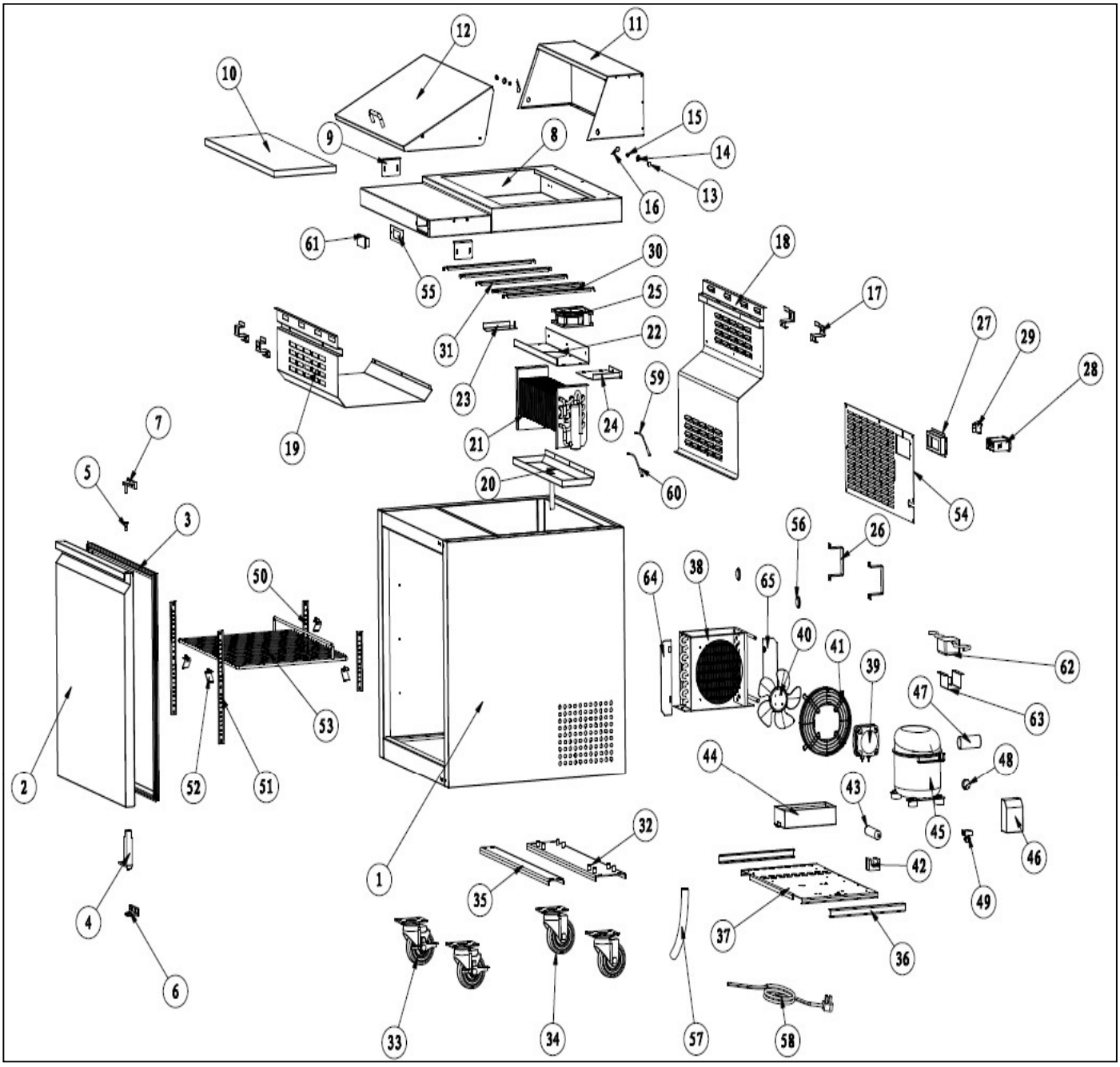

KCMT70.27/738020

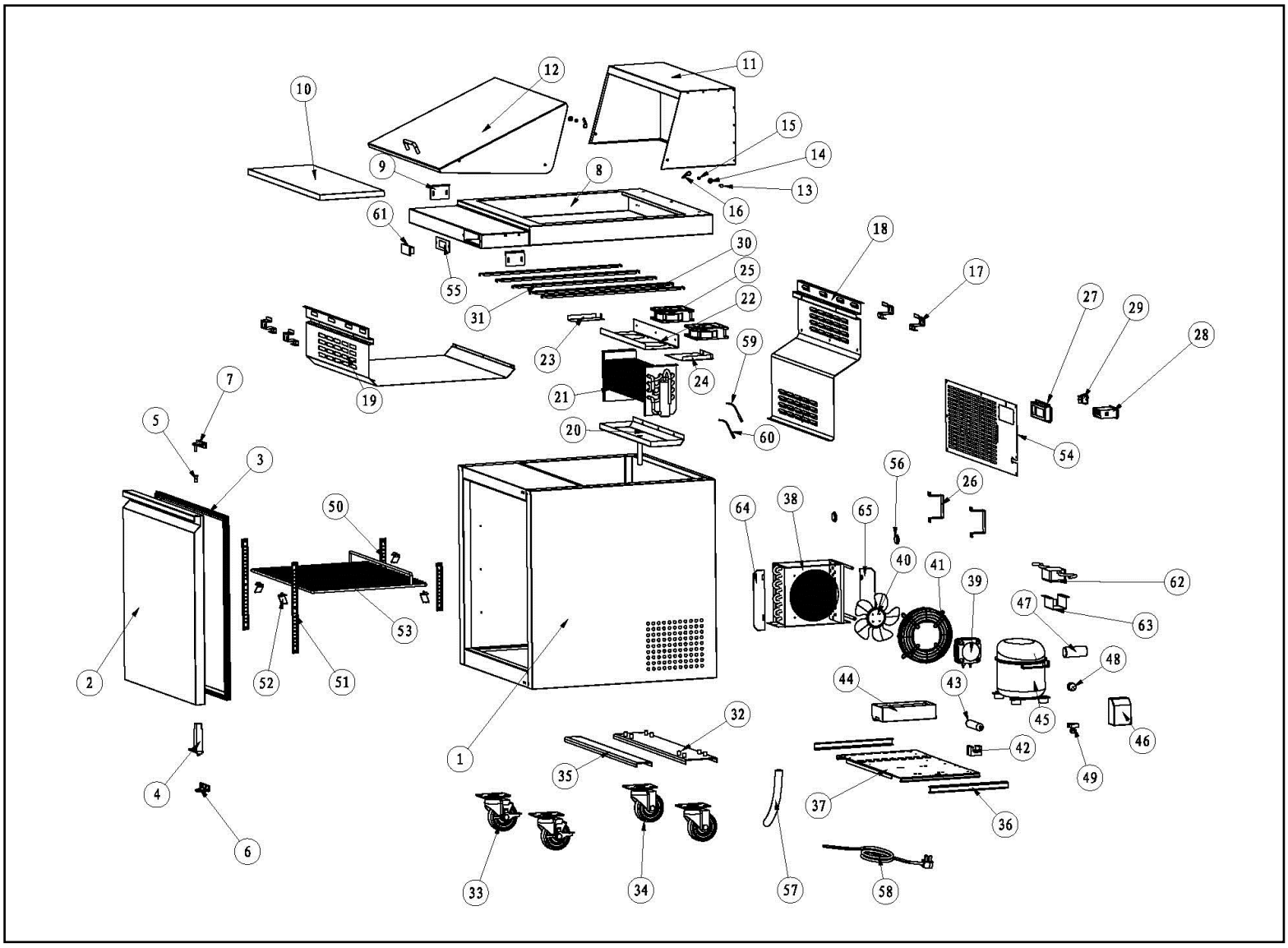

KCST27.8/738016 KCMT27.12/738020 PARTS LIST

NO.	Part English Name	Amounts	Factory Parts NO.		ELECTROLUX PART NO.(OLD)		ELECTROLUX PART NO.(NEW)			
			KCST 27.8	KCMT 27.12			KCMT	27.12		
1	CABINET	1	N/A							
2	DOOR	1	S101							
3	GASKET	1	S102							
4	SPRING HINGE	1	CFD1RR-06							
5	HINGE AXIS	2	27R03							
6	BOTTOM RIGHT HINGE	1	27R04							
7	UPPER RIGHT HINGE	1	27R05							
8	TOP BOARD	1	N/A		N/A					
9	FIXER FOR CUTTING BOARD	2	P106							
10	CUTTING BOARD	1	S103	M101						
11	BACK COVER	1	S104	M102	N/A		N/A			
12	LID	1	S105	M103						
13	DOWEL	2	S106							
14	PLASTIC BOLT	2								
15	NUT	2								
16	SPLIT PIN	2								
17	AIR DUCT SUPPORT	4	S107							
18	EVAPORATOR COVER	1	S108							
19	AIR RETURN COVER	1	S109	M104						
20	INNER DRAIN PAN	1	27R12							
21	EVAPORATOR	1	S110							
22	FAN MOTOR INSTALLATION PANEL	1	S111	M105						
23	LEFT CLAPBOARD OF EVAPORATOR	1	S112	M106						
24	RIGHT CLAPBOARD OF EVAPORATOR	1	S113	M107						
25	EVAPORATOR FAN MOTOR	1&2	CFD1RR-23							
26	STAND OFF BRACKET	2	27R10							
27	THERMOSTAT INSTALLATION BOX	1	27R09							
28	THERMOSTAT	1	CFD1RR-24							
29	POWER SWITCH	1	CFD1RR-25							
30	PAN BRACKET-15mm	2	S114	M108						
31	PAN BRACKET-25mm	3	S115	M109						
32	CASTOR SUPPORT	1	S116							
33	4" CASTOR WITH BRAKE	2	CFD1RR-32							

34	4" CASTOR	2	CFD1RR-33			
35	INSTALLATION BOARD SUPPORT		S117			
36	COMPRESSOR UNIT TRACK	2	27R11			
37	COMPRESSOR UNIT INSTALLATION BOARD	1	27R15			
38	CONDENSER	1	25838			
39	CONDENSER FAN MOTOR	1	25832			
40	CONDENSER FAN MOTOR BLADE	1	25837			
41	CONDENSER FAN COVER	1	25833			
42	FILTER FIXER	1	CFD1RR-44			
43	FILTER	1	25834			
44	OUTER DRAIN PAN	1	27R16			
45	COMPRESSOR	1	CFD1RR-47			
46	SPLICE BOX	1	CFD1RR-47-01			
47	START CAPACITOR	1				
48	OVERLOAD PROTECTOR	1				
49	STARTER	1				
50	K STRIP-2 HOLES	2	27R20			
51	K STRIP-3 HOLES	2	27R19			
52	K CLIP	4	25819			
53	SHELF	1	S118			
54	BACK GRILL	1	S119			
55	FAHRENHEIT TEMP DISPLAY INSTALLATION BOARD	1	27R27			
56	FOAMING HOLE COVER	2	CFD1RR-35			
57	DRAIN TUBE(Φ16mm）	1	P135			
58	POWER CORD	1	25829			
59	TEMPERATURE SENSOR 1 (THERMOSTAT)	1	CFD1RR-48			
60	TEMPERATURE SENSOR 2(FAHRENHEIT TEMP DISP)	1	27R26			
61	FAHRENHEIT TEMP DISPLAY	1	25812			
62	TRANSFORMER FOR FAHRENHEIT TEMP DISPLAY	1	25807			
63	TRANSFORMER HOLDER	1	27R29			
64	AIR SHEILD BOARD 1	1	27R24			
65	AIR SHEILD BOARD 2	1	27R25			
66	THERMOMETER	1	S120			

KCST48.12/738017

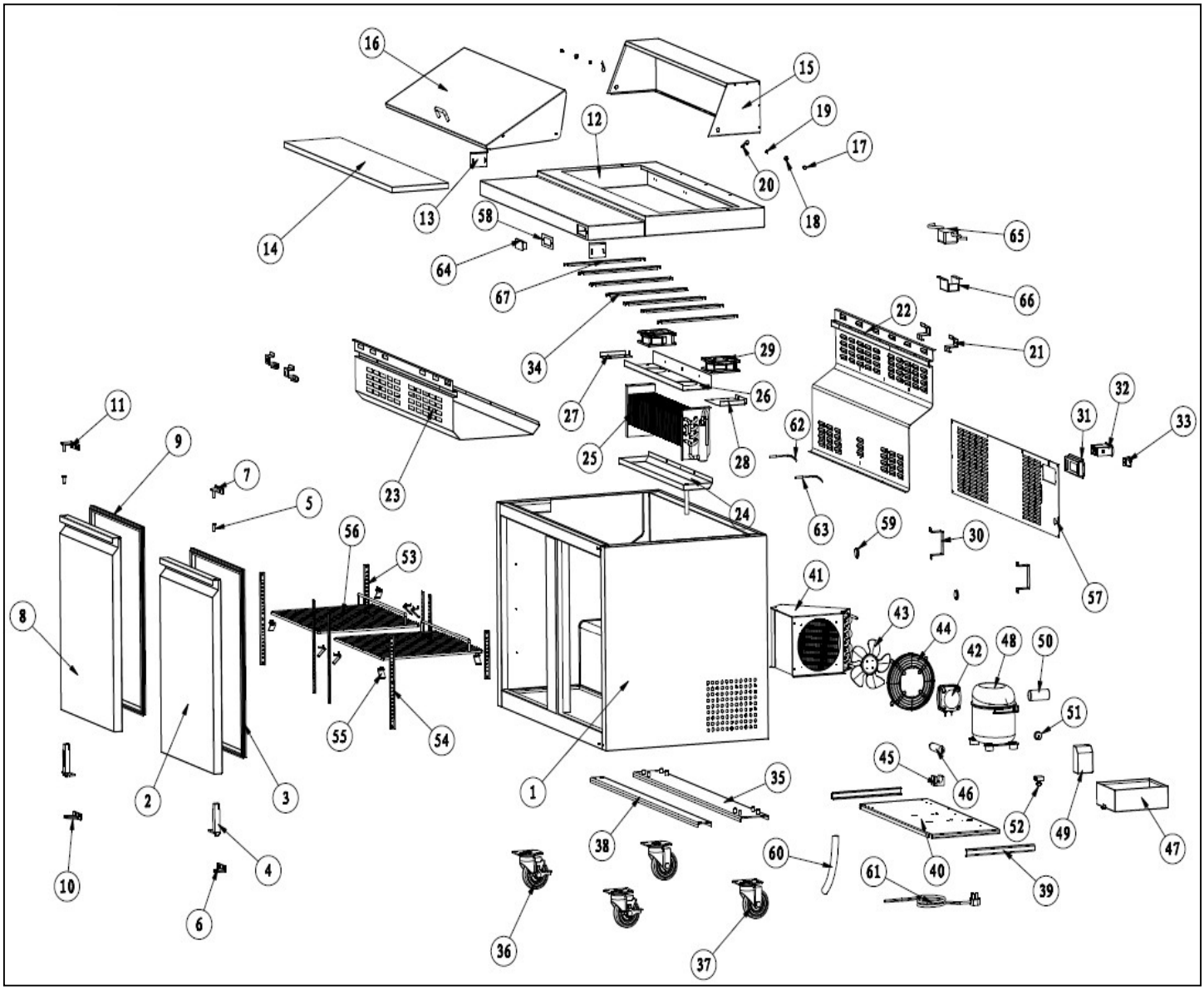

KCST48.18/738021

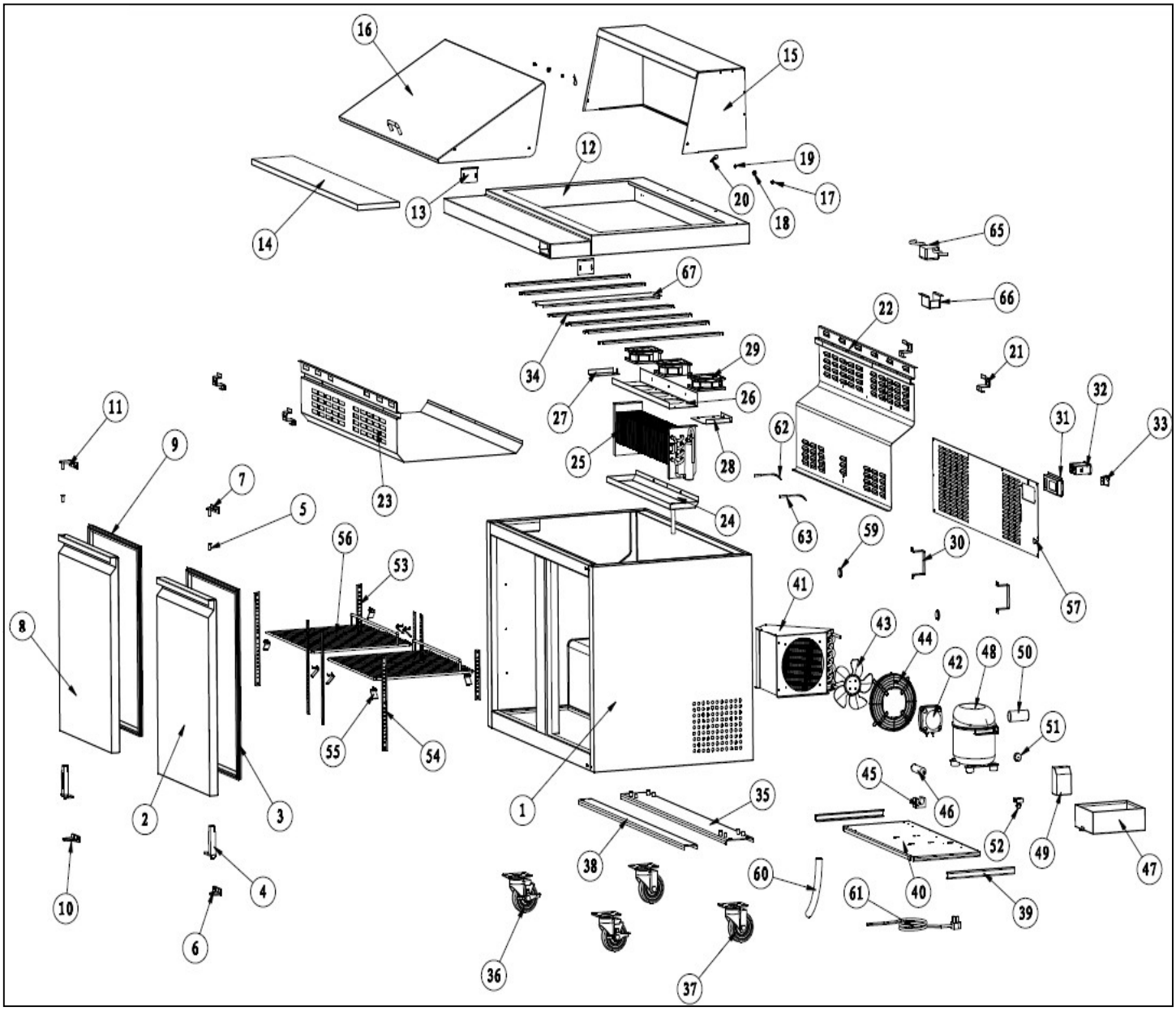

KCST48.12/738017 KCMT48.18/738021 PARTS LIST

NO.	Part English Name	Amounts	Factory Parts NO.		ELECTROLUX PART NO.			
			KCST48.12	KCMT48.12	KCST48.12	KCMT48.12		
1	CABINET	1	N/A					
2	RIGHT DOOR	1	S201					
3	GASKET	2	S202					
4	SPRING HINGE	2	CFD1RR-06					
5	HINGE AXIS	4	27R03					
6	BOTTOM RIGHT HINGE	1	27R04					
7	UPPER RIGHT HINGE	1	27R05					
8	LEFT DOOR	1	S203					
9	GASKET	2	S202					
10	BOTTOM LEFT HINGE	1	48R04					
11	UPPER LEFT HINGE	1	48R05					
12	TOP BOARD	1	N/A					
13	FIXER FOR CUTTING BOARD	2	P106					
14	CUTTING BOARD	1	S204	M201				
15	BACK COVER	1	S205XX	M202	N/A			
16	LID	1	S206	M203				
17	DOWEL	2	S106					
18	PLASTIC BOLT	2						
19	NUT	2						
20	SPLIT PIN	2						
21	AIR DUCT SUPPORT	4	S107					
22	EVAPORATOR COVER	1	S207	M204				
23	AIR RETURN COVER	1	S208	M205				
24	INNER DRAIN PAN	1	S209					
25	EVAPORATOR	1	S210					
26	FAN MOTOR INSTALLATION PANEL	1	S211	M206				
27	LEFT CLAPBOARD OF EVAPORATOR	1	S212	M207				
28	RIGHT CLAPBOARD OF EVAPORATOR	1	S213	M208				
29	EVAPORATOR FAN MOTOR	2&3	CFD1RR-23					
30	STAND OFF BRACKET	2	27R10					
31	THERMOSTAT INSTALLATION	1	27R09					
32	THERMOSTAT	1	CFD1RR-24					
33	POWER SWITCH	1	CFD1RR-25					
34	PAN BRACKET-25mm	5&6	S219	M109				
35	CASTOR SUPPORT	1	S214					
36	4" CASTOR WITH BRAKE	2	CFD1RR-32					
37	4" CASTOR	2	CFD1RR-33					
38	INSTALLATION BOARD SUPPORT	1	S215					
39	COMPRESSOR UNIT TRACK	2	27R11					
40	COMPRESSOR UNIT INSTALLATION BOARD	1	48R10					
41	CONDENSER	1	S216					
42	CONDENSER FAN MOTOR	1	CFD2RR-41					
43	CONDENSER FAN MOTOR BLADE	1	27F02					

44	CONDENSER FAN COVER	1	25833					
45	FILTER FIXER	1	CFD1RR-44					
46	FILTER	1	25834					
47	OUTER DRAIN PAN	1	48R11					
48	COMPRESSOR	1	64835					
49	SPLICE BOX	1	64836					
50	START CAPACITOR	1						
51	OVERLOAD PROTECTOR	1						
52	STARTER	1						
53	K STRIP-2 HOLES	4	27R20					
54	K STRIP-3 HOLES	4	27R19					
55	K CLIP	8	25819					
56	SHELF	2	48R14					
57	BACK GRILL	1	S217					
58	FAHRENHEIT TEMP DISPLAY INSTALLATION BOARD	1	27R25					
59	FOAMING HOLE COVER	2	CFD1RR-35					
60	DRAIN TUBE(Φ16mm）	1	P135					
61	POWER CORD	1	25829					
62	TEMPERATURE SENSOR 1 (THERMOSTAT)	1	CFD1RR-48					
63	TEMPERATURE SENSOR 2 (FAHRENHEIT TEMP DISP)	1	27R26					
64	FAHRENHEIT TEMP DISPLAY	1	25812					
65	TRANSFORMER FOR FAHRENHEIT TEMP	1	25807					
66	TRANSFORMER HOLDER	1	27R29					
67	PAN BRACKET-15/90mm	2&1	S218	M209				
68	THERMOMETER	1	S120					

KCST60.16/738018

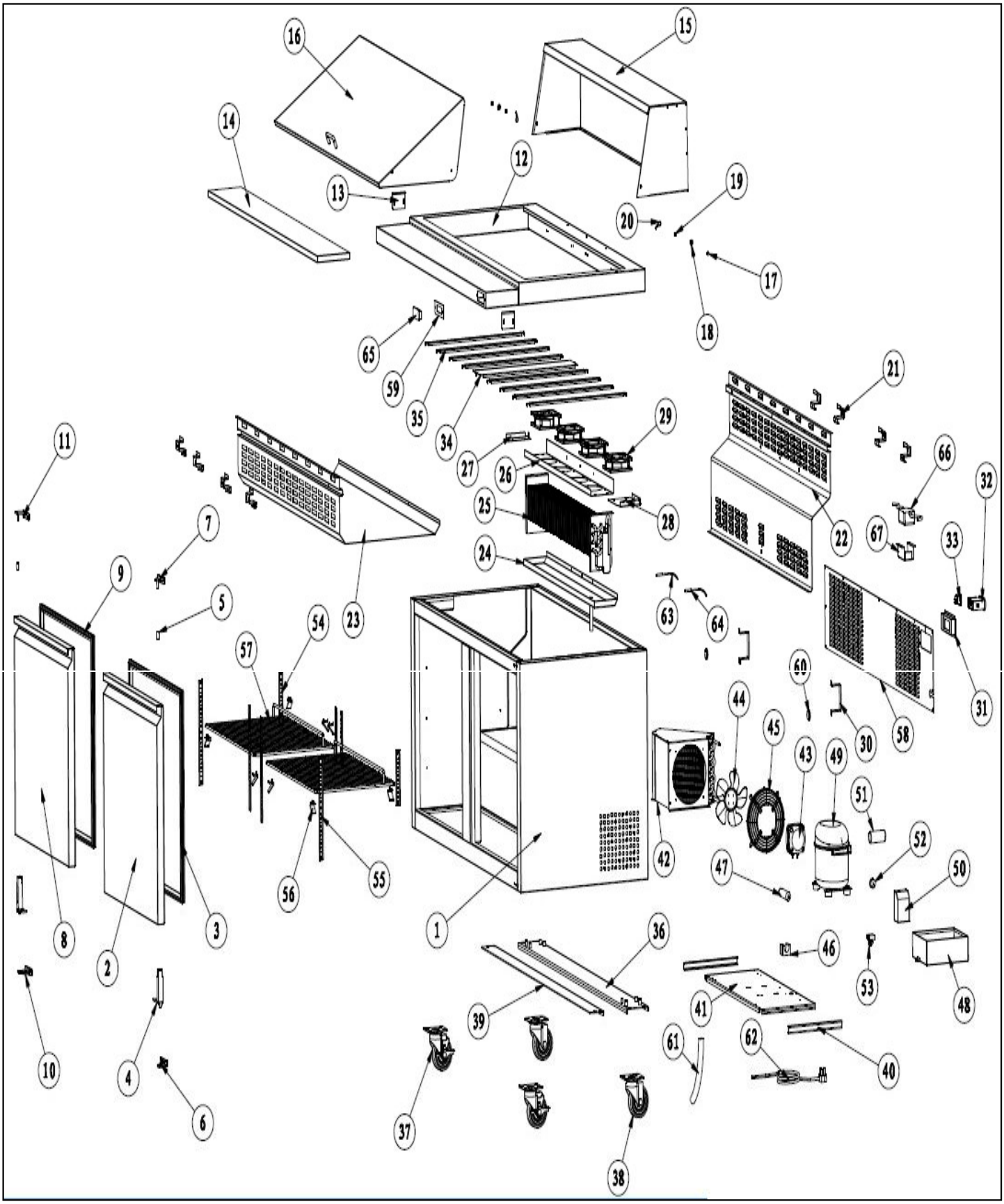

KCMT60.24/738022

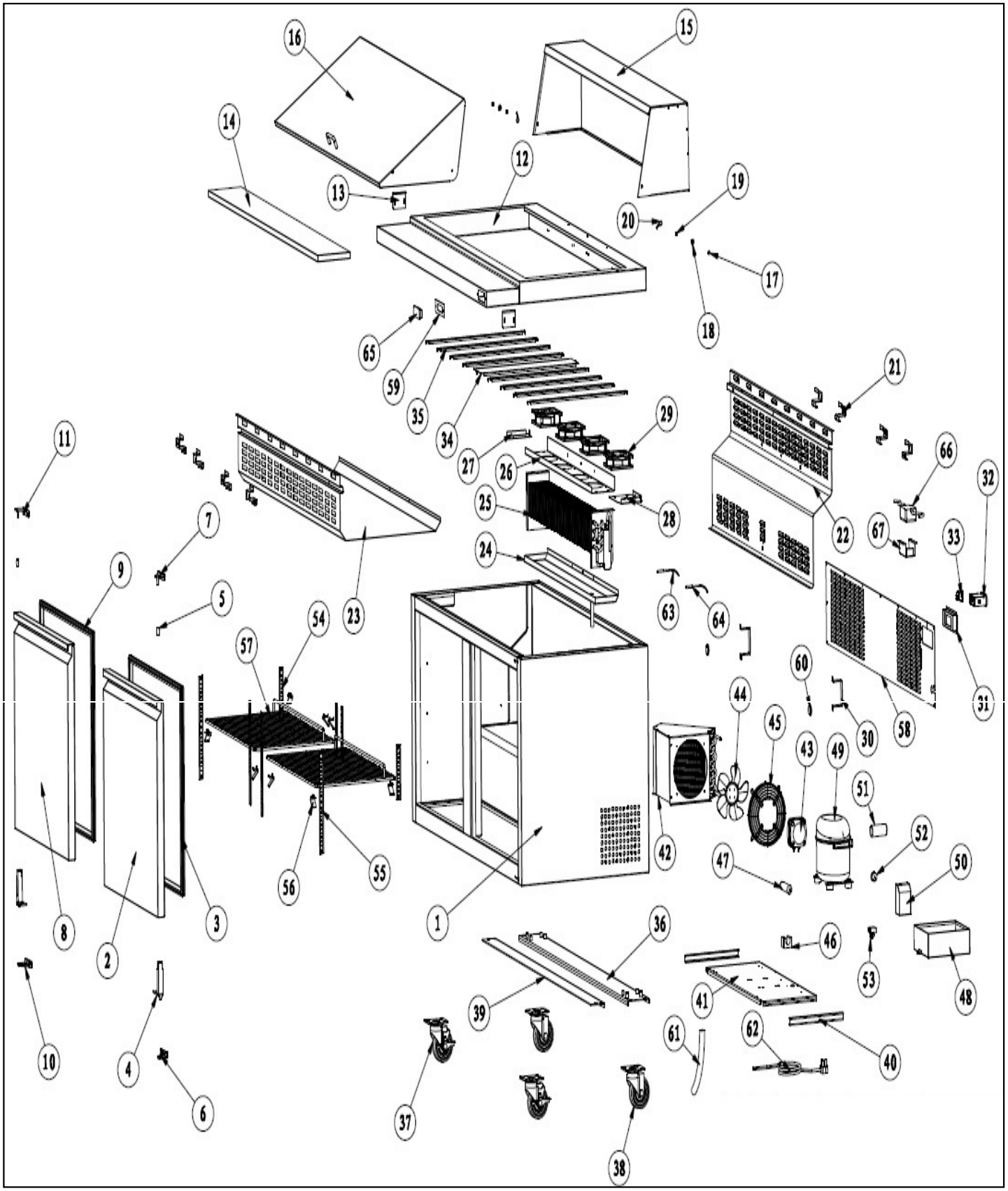

KCST60.16/738018 KCMT60.24/738022 PARTS LIST

NO.	Part English Name	Amounts	Factory Parts NO.		ELECTROLUX PART NO			
			SCL2-60	SCLM2-60	SCL2-60	SCLM2-60		
1	CABINET	1	N/A		N/A			
2	RIGHT DOOR	1	S601					
3	GASKET	2	S602					
4	SPRING HINGE	2	CFD1RR-06					
5	HINGE AXIS COVER	4	27R03					
6	BOTTOM RIGHT HINGE	1	27R04					
7	UPPER RIGHT HINGE	1	27R05					
8	LEFT DOOR	1	S603					
9	GASKET	2	S602					
10	BOTTOM LEFT HINGE	1	48R04					
11	UPPER LEFT HINGE	1	48R05					
12	TOP BOARD	1	N/A		N/A			
13	FIXER FOR CUTTING BOARD	2	P106					
14	CUTTING BOARD	1	S604	M601				
15	BACK COVER	1	S605	M602				
16	LID	1	S606	M603				
17	DOWEL	2	S106					
18	PLASTIC BOLT	2						
19	NUT	2						
20	SPLIT PIN	2						
21	AIR DUCT SUPPORT	8	S107					
22	EVAPORATOR COVER	1	S607	M604				
23	AIR RETURN COVER	1	S608	M605				
24	INNER DRAIN PAN	1	S609					
25	EVAPORATOR	1	S610					
26	FAN MOTOR INSTALLATION	1	S611	M606				
27	LEFT CLAPBOARD OF EVAPORATOR	1	S612	M607				
28	RIGHT CLAPBOARD OF EVAPORATOR	1	S613	M608				
29	EVAPORATOR FAN MOTOR	3&4	CFD1RR-23					
30	STAND OFF BRACKET	2	27R10					
31	THERMOSTAT INSTALLATION	1	27R09					
32	THERMOSTAT	1	CFD1RR-24					
33	POWER SWITCH	1	CFD1RR-25					
34	PAN BRACKET-15/108mm	2&1	S218	M110		N/A		
35	PAN BRACKET-25mm	7&8	S219	M109				
36	CASTOR SUPPORT	1	S614					
37	4" CASTOR WITH BRAKE	2	CFD1RR-32					
38	4" CASTOR	2	CFD1RR-33					
39	INSTALLATION BOARD SUPPORT	1	S615					
40	COMPRESSOR UNIT TRACK	2	27R11					
41	COMPRESSOR UNIT INSTALLATION BOARD	1	48R10					
42	CONDENSER	1	S216					
43	CONDENSER FAN MOTOR	1	CFD2RR-41					

44	CONDENSER FAN MOTOR BLADE	1	27F02		
45	CONDENSER FAN MOTOR COVER	1	25833		
46	FILTER FIXER	1	CFD1RR-44		
47	FILTER	1	25834		
48	OUTER DRAIN PAN	1	48R11		
49	COMPRESSOR	1	64835		
50	SPLICE BOX	1	64836		
51	START CAPACITOR	1			
52	OVERLOAD PROTECTOR	1			
53	STARTER	1			
54	K STRIP-2 HOLES	4	27R20		
55	K STRIP-3 HOLES	4	27R19		
56	K CLIP	8	25819		
57	SHELF	2	S616		
58	BACK GRILL	1	S617		
59	FAHRENHEIT TEMP DISPLAY	1	27R27		
60	FOAMING HOLE COVER	2	CFD1RR-35		
61	DRAIN TUBE(16mm)	1	P135		
62	POWER CORD	1	25829		
63	TEMPERATURE SENSOR 1 (THERMOSTAT)	1	CFD1RR-48		
64	TEMPERATURE SENSOR 2 (FAHRENHEIT TEMP DISP)	1	27R26		
65	FAHRENHEIT TEMP DISPLAY	1	25812		
66	TRANSFORMER FOR FAHRENHEIT TEMP	1	25807		
67	TRANSFORMER HOLDER	1	27R29		
68	THERMOMETER	1	S120		

KCST70.18/738019

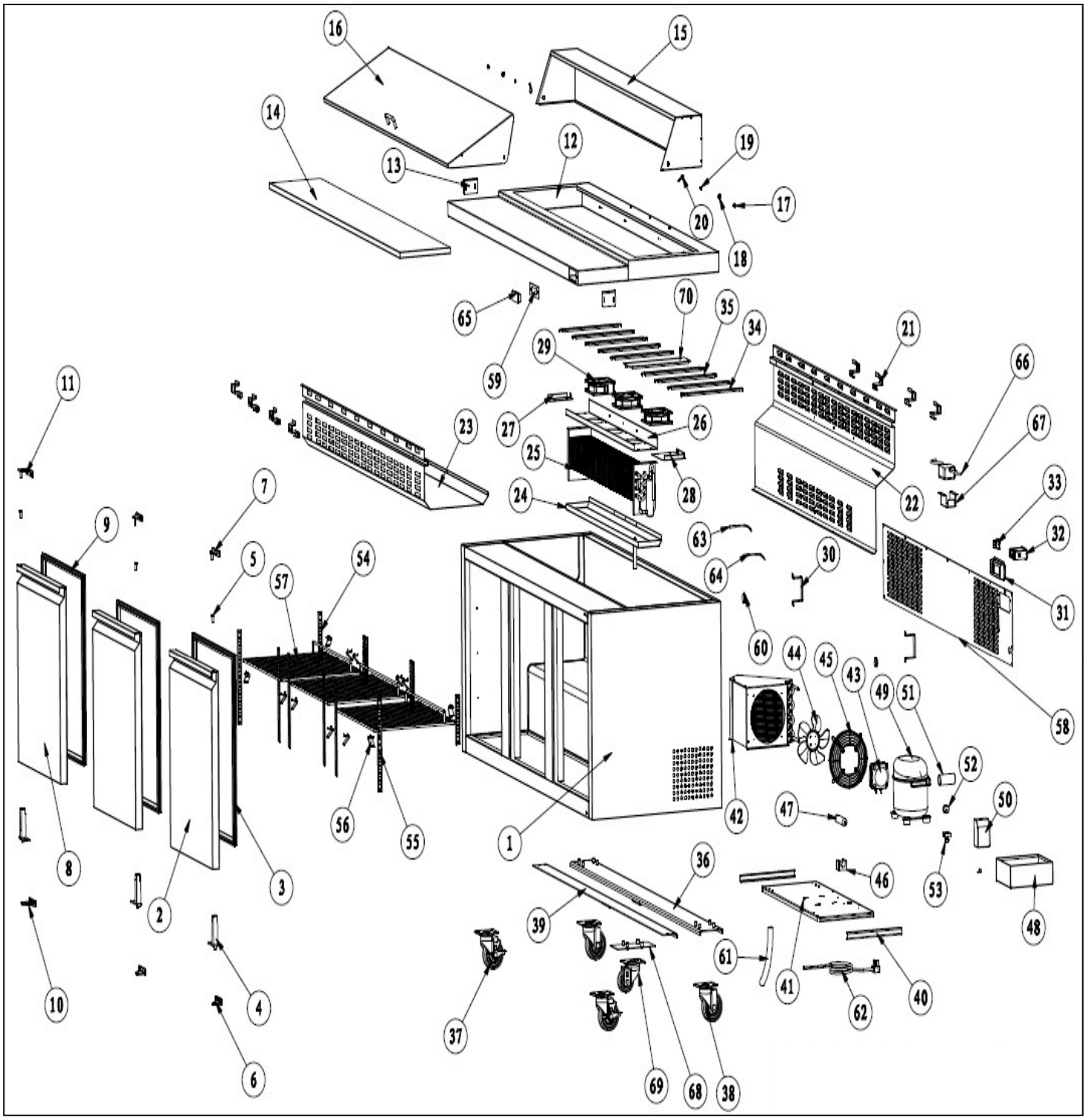

KCMT70.30/738023

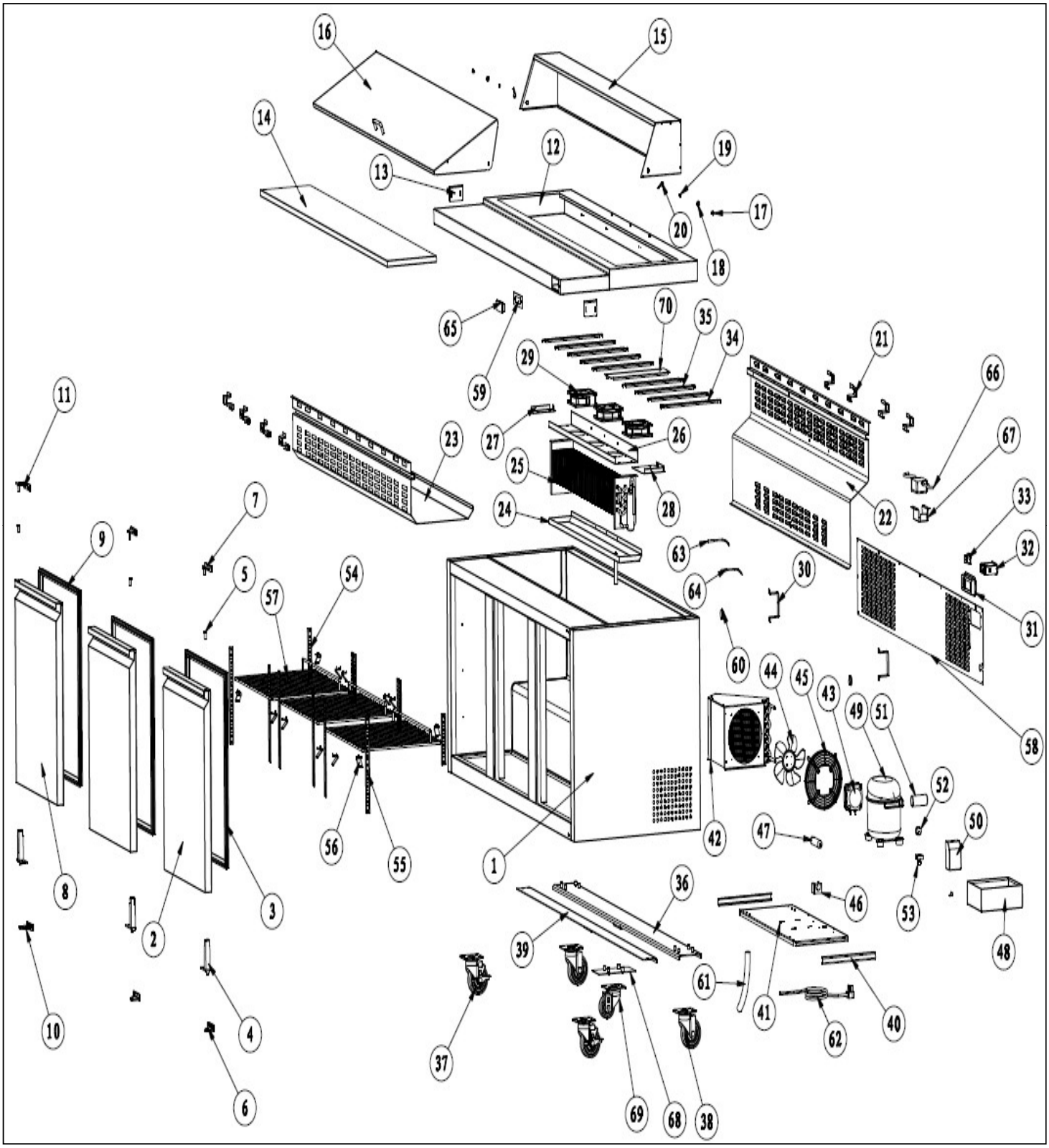

KCST70.16/738019 KCMT70.24/SCLM3 PARTS LIST

NO.	Part English Name	Amounts	Factory Parts NO.		ELECTROLUX PART NO.(**OLD**)			
			KCST70.16	KCMT70.27	KCST70.16	KCMT70.27	KCST 70.18	KCMT 70.27
1	CABINET	1	N/A		N/A		·	
2	RIGHT DOOR	1	S301/S201					
3	GASKET	2	S302/S202					
4	SPRING HINGE	2	CFD1RR-06					
5	HINGE AXIS COVER	4	27R03					
6	BOTTOM RIGHT HINGE	1	27R04					
7	UPPER RIGHT HINGE	1	27R05					
8	LEFT DOOR	1	S303/S203					
9	GASKET	2	S302/S202					
10	BOTTOM LEFT HINGE	1	48R04					
11	UPPER LEFT HINGE	1	48R05					
12	TOP BOARD	1	N/A		N/A			
13	FIXER FOR CUTTING BOARD	2	P106					
14	CUTTING BOARD	1	S304	M301				
15-1	BACK COVER 1 (BIGGER ONE)	1	S305	M302				
15-2	BACK COVER 2(SMALLER ONE)	1	S306	M303				
16-1	LID 1 (BIGGER ONE)	1	S307	M304				
16-2	LID 2 (SMALLER ONE)	1	S308	M305				
17	DOWEL	4	S106					
18	PLASTIC BOLT	4						
19	NUT	4						
20	SPLIT PIN	4						
21	AIR DUCT SUPPORT	8	S107					
22	EVAPORATOR COVER	1	S309	M306				
23	AIR RETURN COVER	1	S310	M307				
24	INNER DRAIN PAN	1	S311					
25	EVAPORATOR	1	S610					
26	FAN MOTOR INSTALLATION PANEL	1	S611	M606				
27	LEFT CLAPBOARD OF EVAPORATOR	1	S312	M308				
28	RIGHT CLAPBOARD OF EVAPORATOR	1	S313	M309				
29	EVAPORATOR FAN MOTOR	3&4	CFD1RR-23					
30	STAND OFF BRACKET	2	27R10					
31	THERMOSTAT INSTALLATION BOX	1	27R09					
32	THERMOSTAT	1	CFD1RR-24					
33	POWER SWITCH	1	CFD1RR-25					
34	PAN BRACKET-15mm	2	S218	N/A		N/A		
35	PAN BRACKET-25mm	7&11	S219	M109				
36	CASTOR SUPPORT	1	S314					
37	4" CASTOR WITH BRAKE	2	CFD1RR-32					
38	4" CASTOR	2	CFD1RR-33					
39	INSTALLATION BOARD SUPPORT	1	S315					
40	COMPRESSOR UNIT TRACK	2	27R11					
41	COMPRESSOR UNIT INSTALLATION BOARD	1	48R10					
42	CONDENSER	1	S216					

43	CONDENSER FAN MOTOR	1	CFD2RR-41					
44	CONDENSER FAN MOTOR BLADE	1	27F02					
45	CONDENSER FAN COVER	1	25833					
46	FILTER FIXER	1	CFD1RR-44					
47	FILTER	1	CFD1RR-45					
48	OUTER DRAIN PAN	1	48R11					
49	COMPRESSOR	1	CFD2RR-47					
50	SPLICE BOX	1	CFD2RR-47-01					
51	START CAPACITOR	1						
52	OVERLOAD PROTECTOR	1						
53	STARTER	1						
54	K STRIP-2 HOLES	6	27R20					
55	K STRIP-3 HOLES	6	27R19					
56	K CLIP	12	25819					
57	SHELF	3	S316					
58	BACK GRILL	1	S317					
59	FAHRENHEIT TEMP DISPLAY INSTALLATION BOARD	1	27R27					
60	FOAMING HOLE COVER	2	CFD1RR-35					
61	DRAIN TUBE(16mm)	1	P135					
62	POWER CORD	1	25829					
63	TEMPERATURE SENSOR 1 (THERMOSTAT)	1	CFD1RR-48					
64	TEMPERATURE SENSOR 2 (FAHRENHEIT TEMP DISP)	1	27R26					
65	FAHRENHEIT TEMP DISPLAY	1	25812					
66	TRANSFORMER FOR FAHRENHEIT TEMP DISPLAY	1	25807					
67	TRANSFORMER HOLDER	1	27R29					
68	MIDDLE SMALL CASTER SUPPORT	1	S318					
69	MIDDLE SMALL CASTER (BASEPLATE, WITHOUT	1	S319					
70	PAN BRACKET-90mm	1	S320	N/A		N/A		
71	TOP BOARD PLATE	1	S321	M310				
72	WINDSHIELD STRIP	1	S322	M311				